EbV elektronik

heatcon!

heatcon! EC

heatcon! EC hybrid system, 2x MC, combi buffer, solar

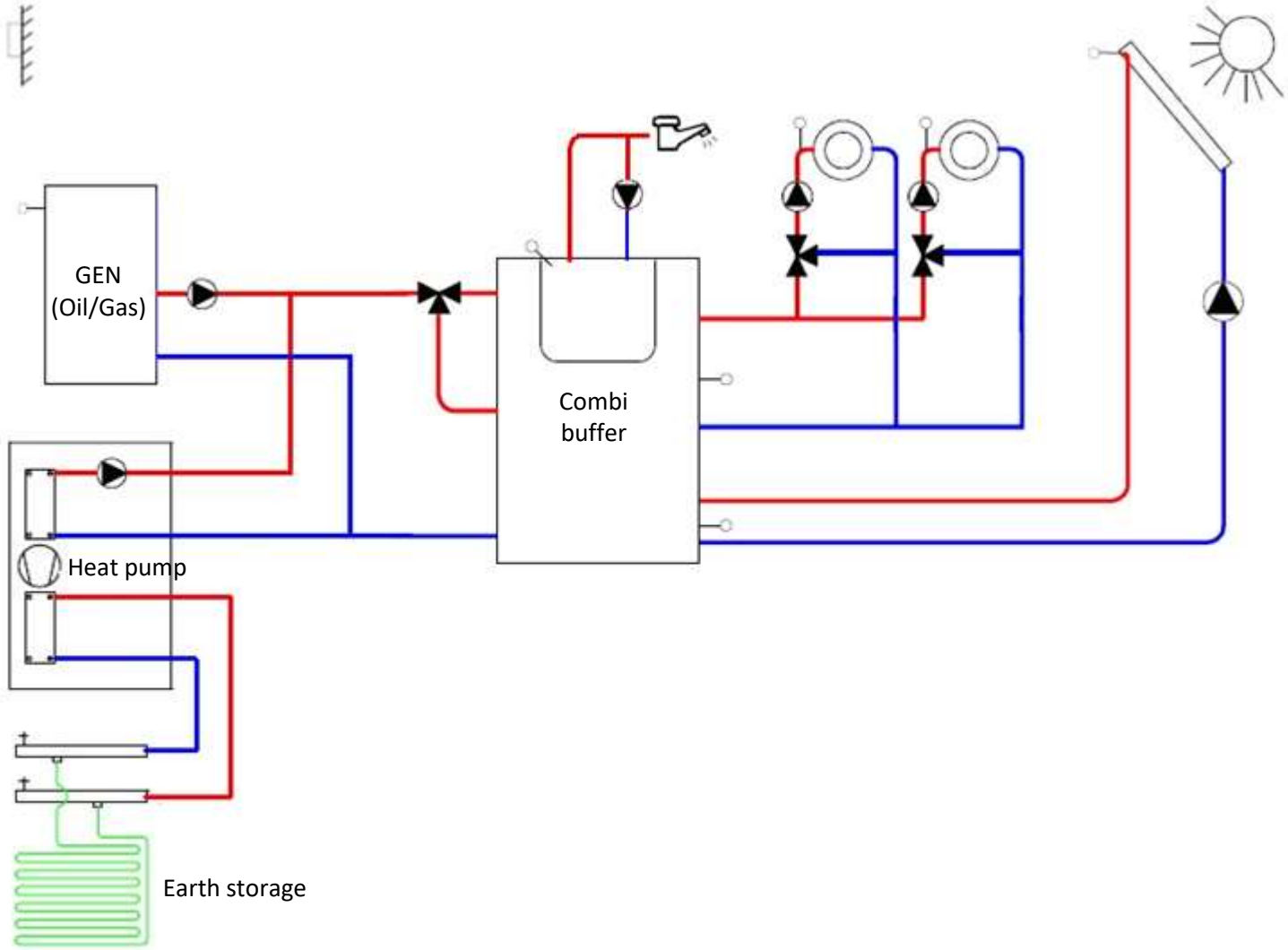

EbV elektronik

heatcon! Installation

The installation, as far as the connection of the inputs and outputs is concerned, can be carried out in advance if the assignment is planned according to the available hydraulics.

But the connection can also be made after completing the setup wizard and possibly further configuration afterwards.

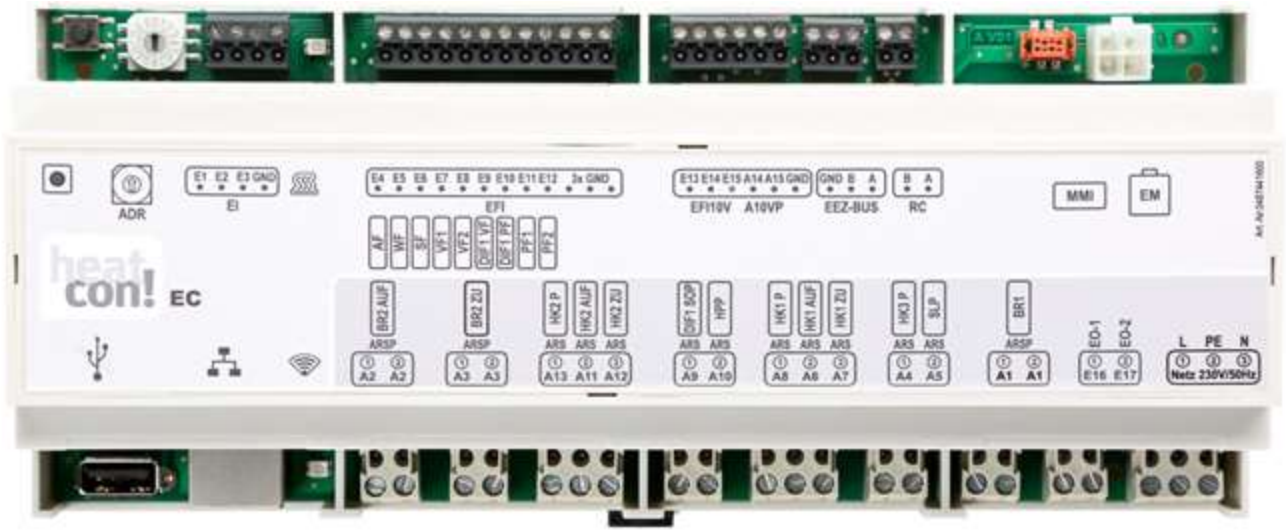

EbV elektronik

heatcon! Setup wizard via MMI 200

Navigation on the MMI is done by turning and pressing.

heatcon! EC hybrid system, 2x MC, combi buffer, solar

Setup wizard
Hydraulics
Step 1:
Language selection

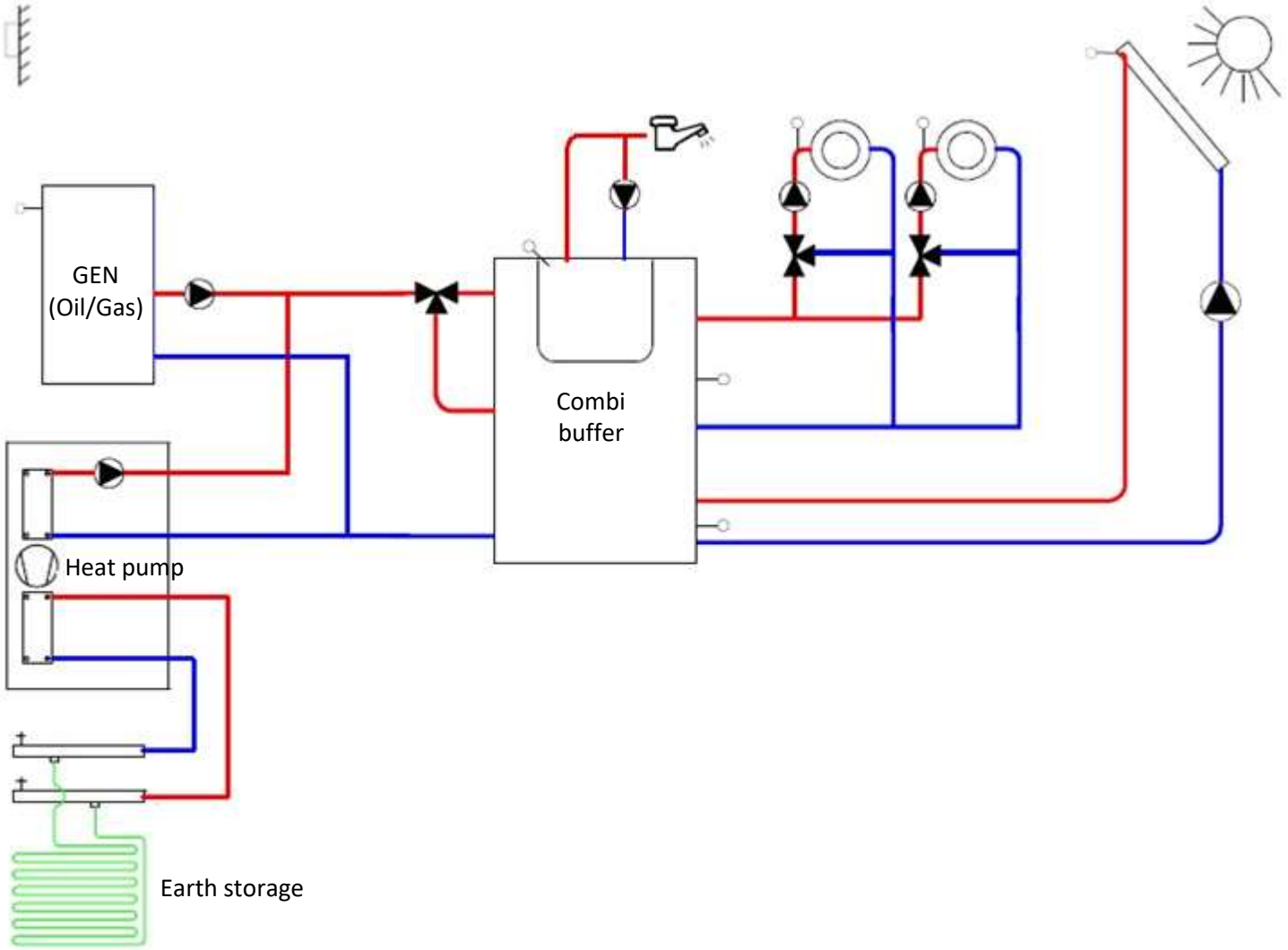

EbV elektronik

heatcon! EC hybrid system, 2x MC, combi buffer, solar

Setup wizard
Hydraulics
Step 2:
Energy generator 1
Function
single-stage burner

Connection
E5:EFI WF
E4:EFI AF
A1:ARSP-BR1

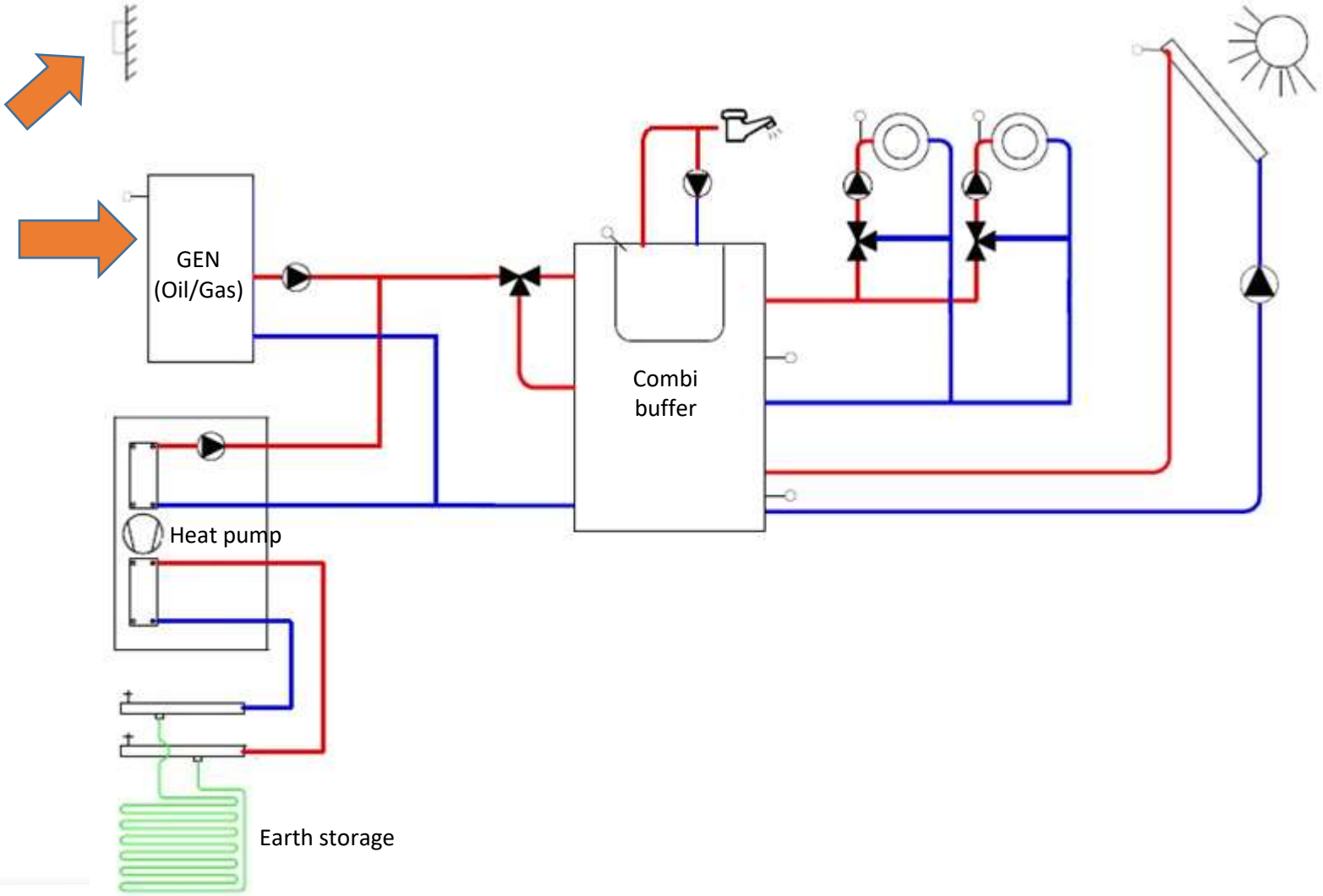

heatcon! EC hybrid system, 2x MC, combi buffer, solar

Setup wizard
Hydraulics
Step 3:
Energy generator 2
Function
single-stage burner

Connection
E13:EFI10V (WF2)
A2:ARSP-BR2

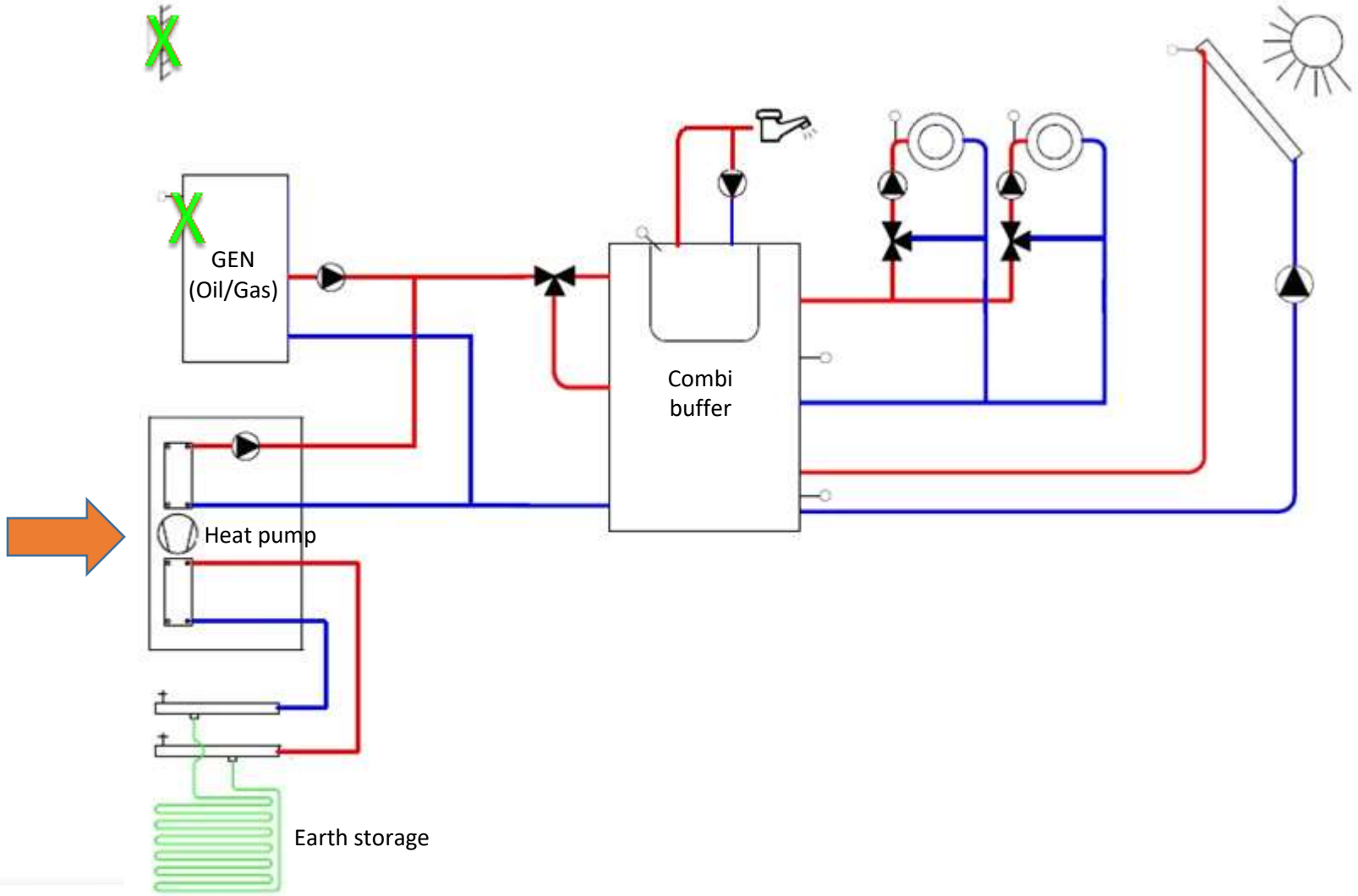

heatcon! EC hybrid system, 2x MC, combi buffer, solar

Setup wizard
Hydraulics
Step 4:
Heating buffer
Function
Charge control

Connection
E11:EFI (PF1)
A19:ARS-HPP
Not needed

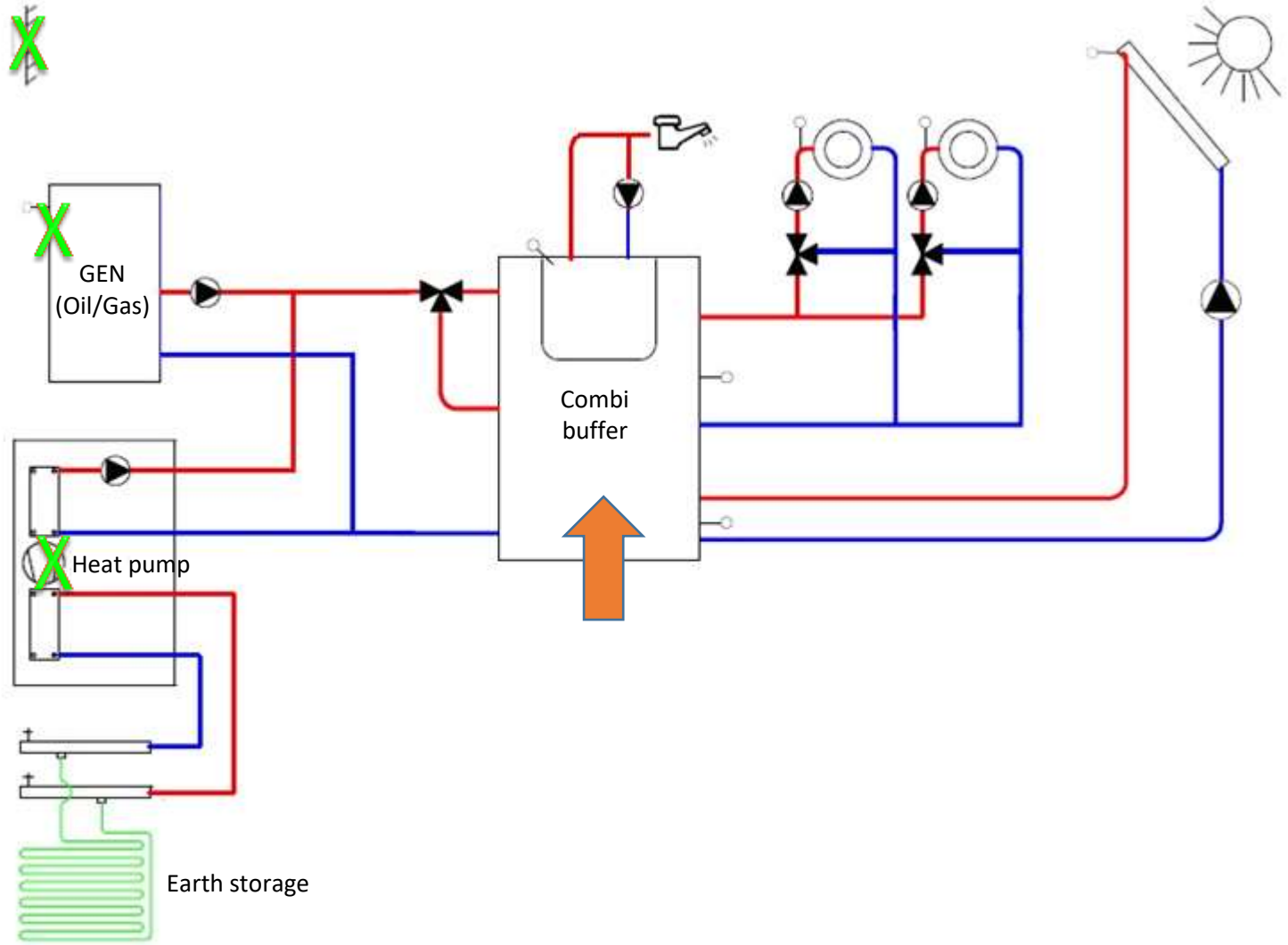

heatcon! EC hybrid system, 2x MC, combi buffer, solar

Setup wizard
Hydraulics
Step 5:
Hot water mode
Function

Storage tank charging pump

Connection
E6:EFI1 (SF)
A5:ARS (SLP)
The diverter valve will be made via storage pump controlled.

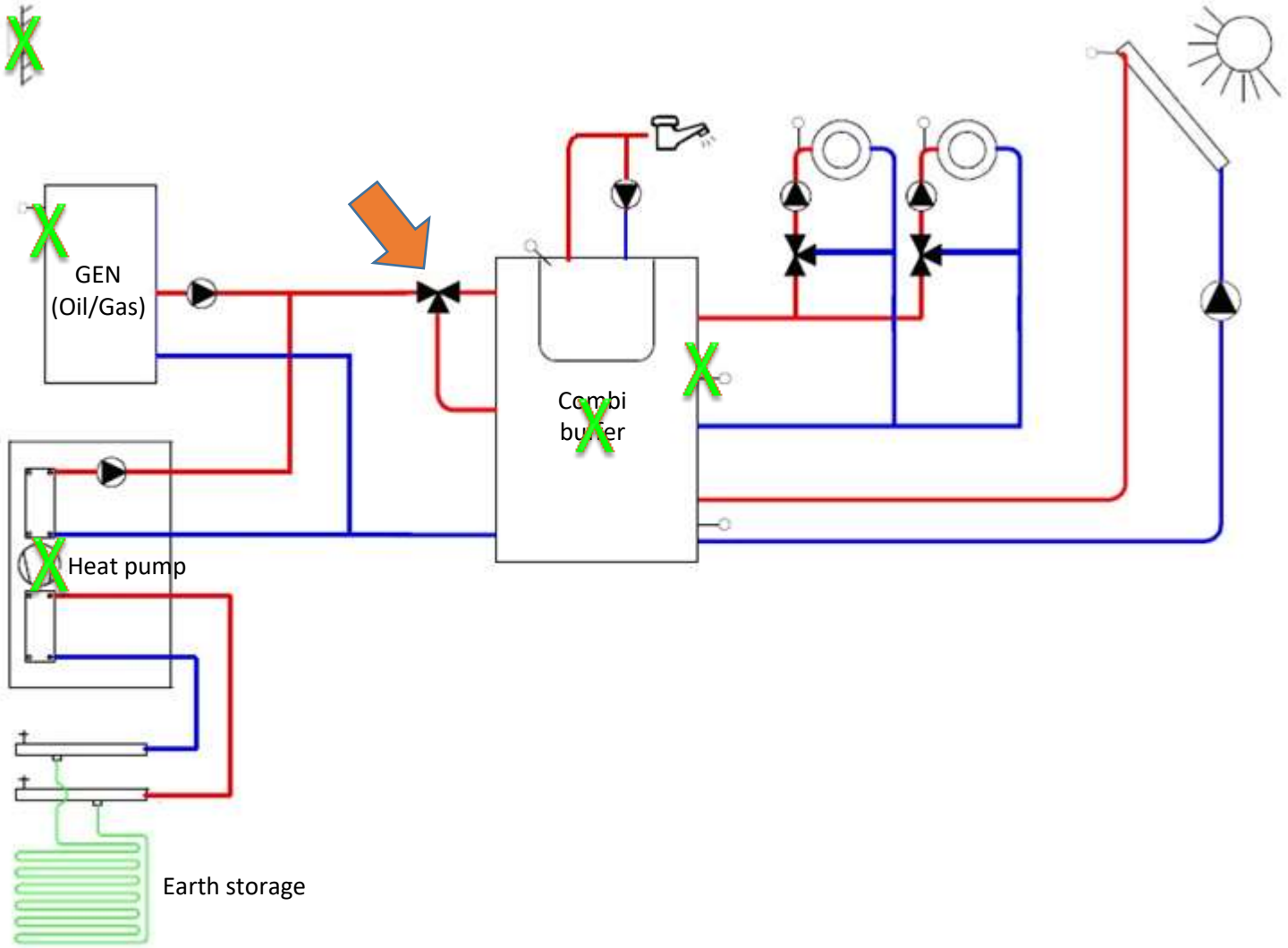

heatcon! EC hybrid system, 2x MC, combi buffer, solar

Setup wizard
Hydraulics
Step 6:
Heating circuit 1
Function
Mixing circuit

Connection
E7:EFI1 (VF1)
A6:ARS (HK1 AUF)
A7:ARS (HK1 ZU)
A8:ARS (HK1 P)

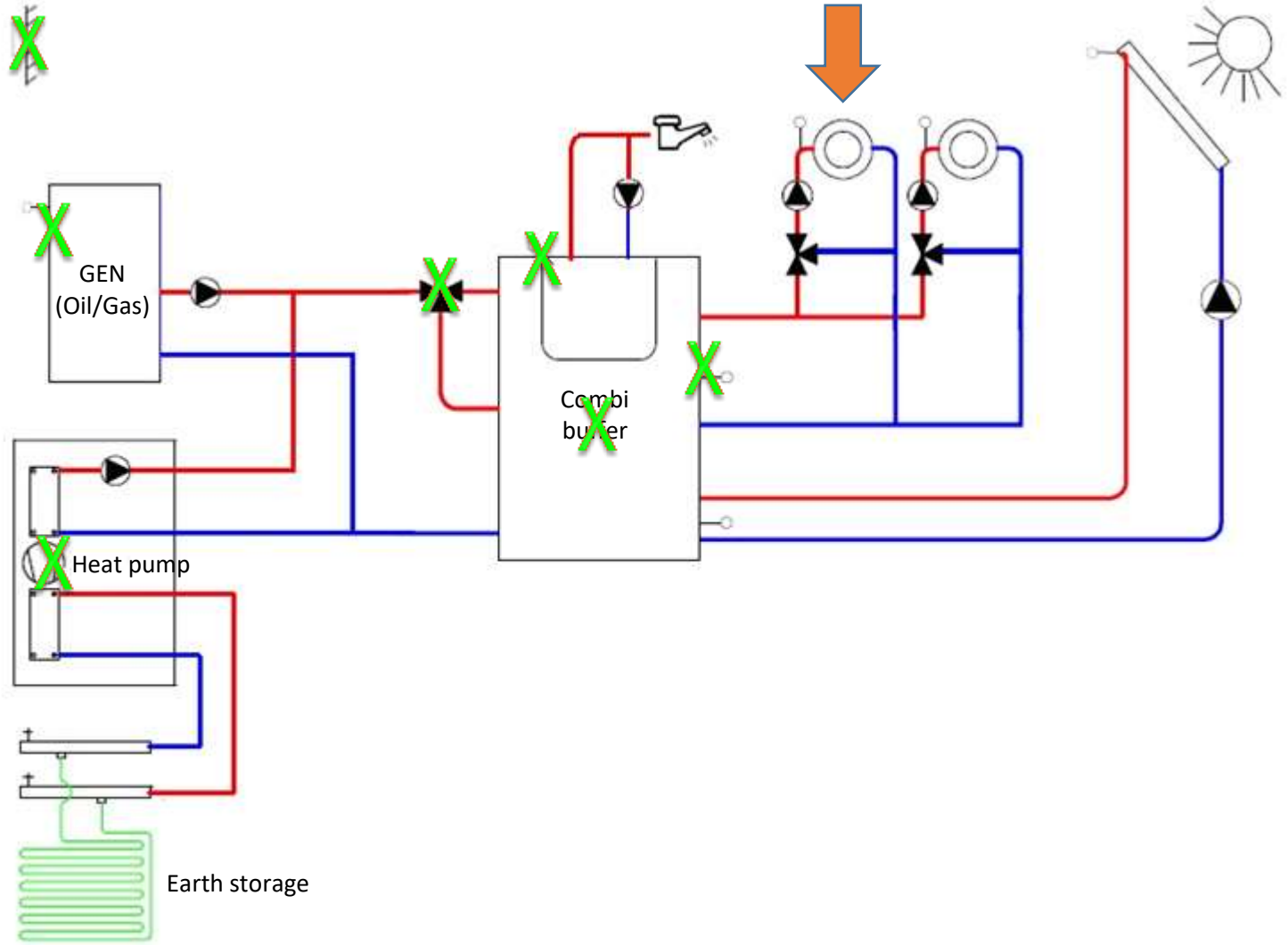

heatcon! EC hybrid system, 2x MC, combi buffer, solar

Setup wizard
Hydraulics
Step 7:
Heating circuit 2
Function
Mixing circuit

Connection
E8:EFI (VF2)
A11:ARS (HK2 AUF)
A12:ARS (HK2 ZU)
A13:ARS (HK2 P)

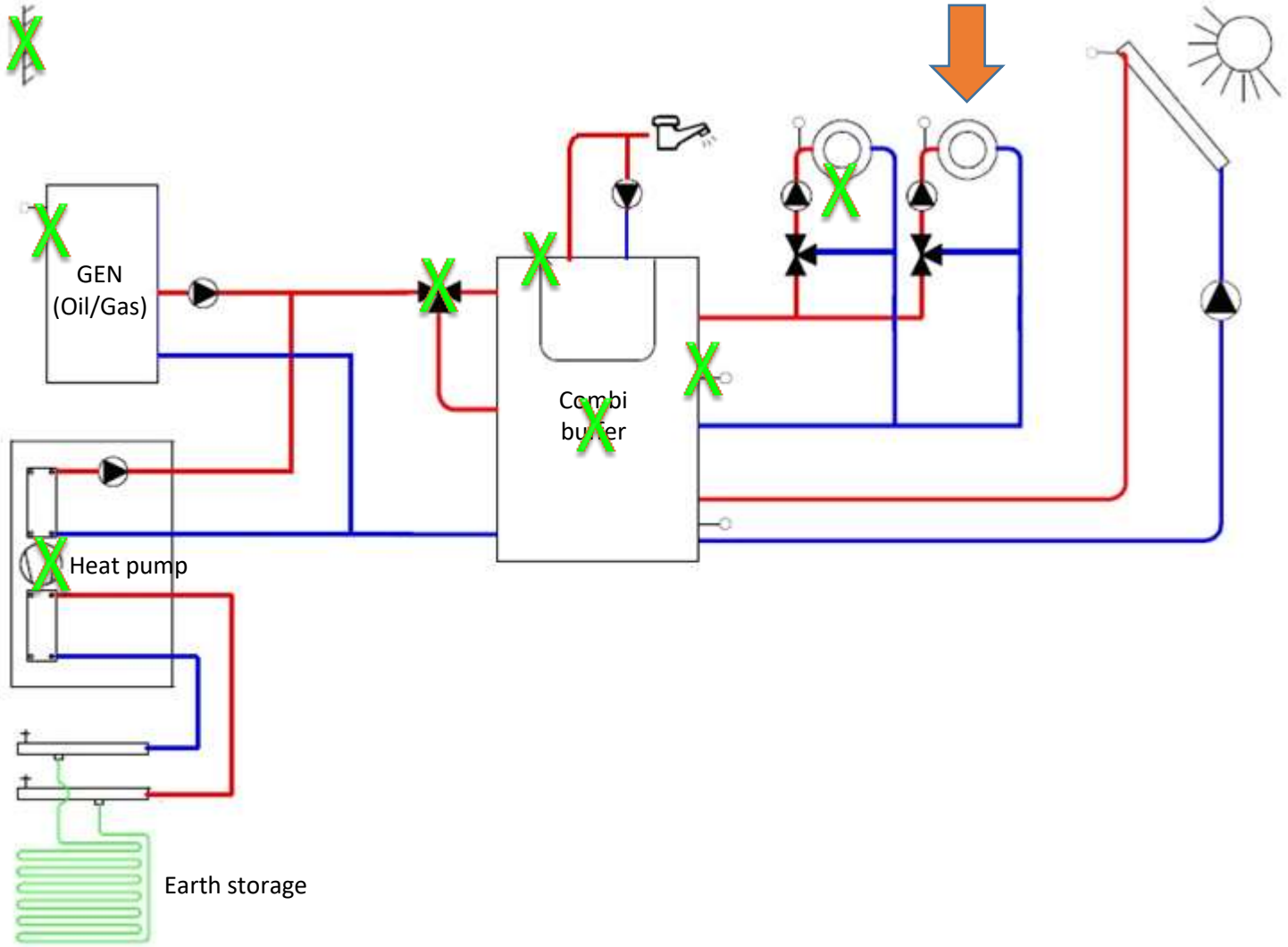

heatcon! EC hybrid system, 2x MC, combi buffer, solar

Setup wizard
Hydraulics
Step 8:
Heating circuit 3
Function
OFF

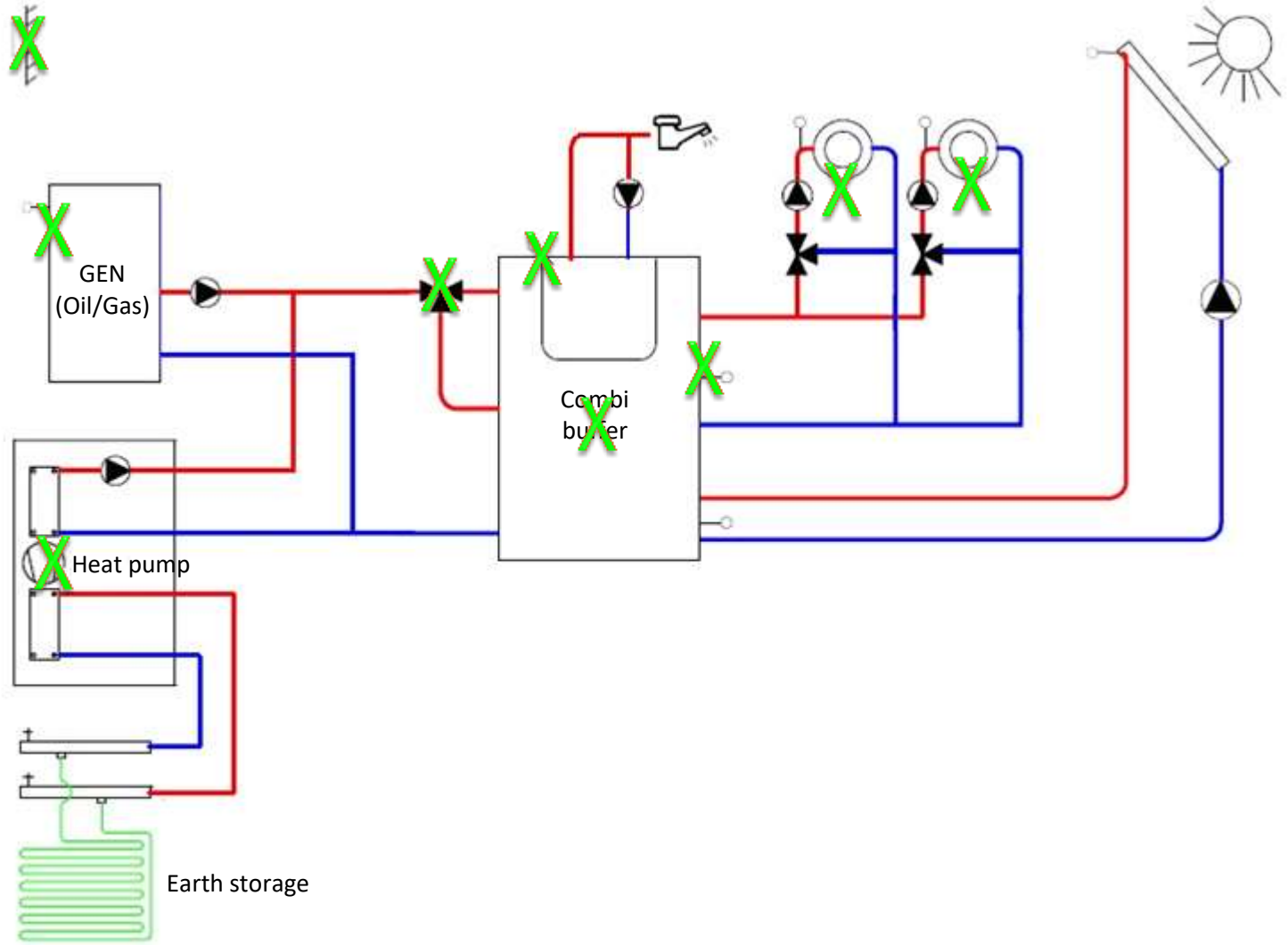

heatcon! EC hybrid system, 2x MC, combi buffer, solar

Setup wizard
Hydraulics
Step 9:
Differential control 1
Function
Solar

Connection
E9:EFI (DIF1 VF)
E10:EFI (DIF1 PF)
A9:ARS (DIF1 SOP)

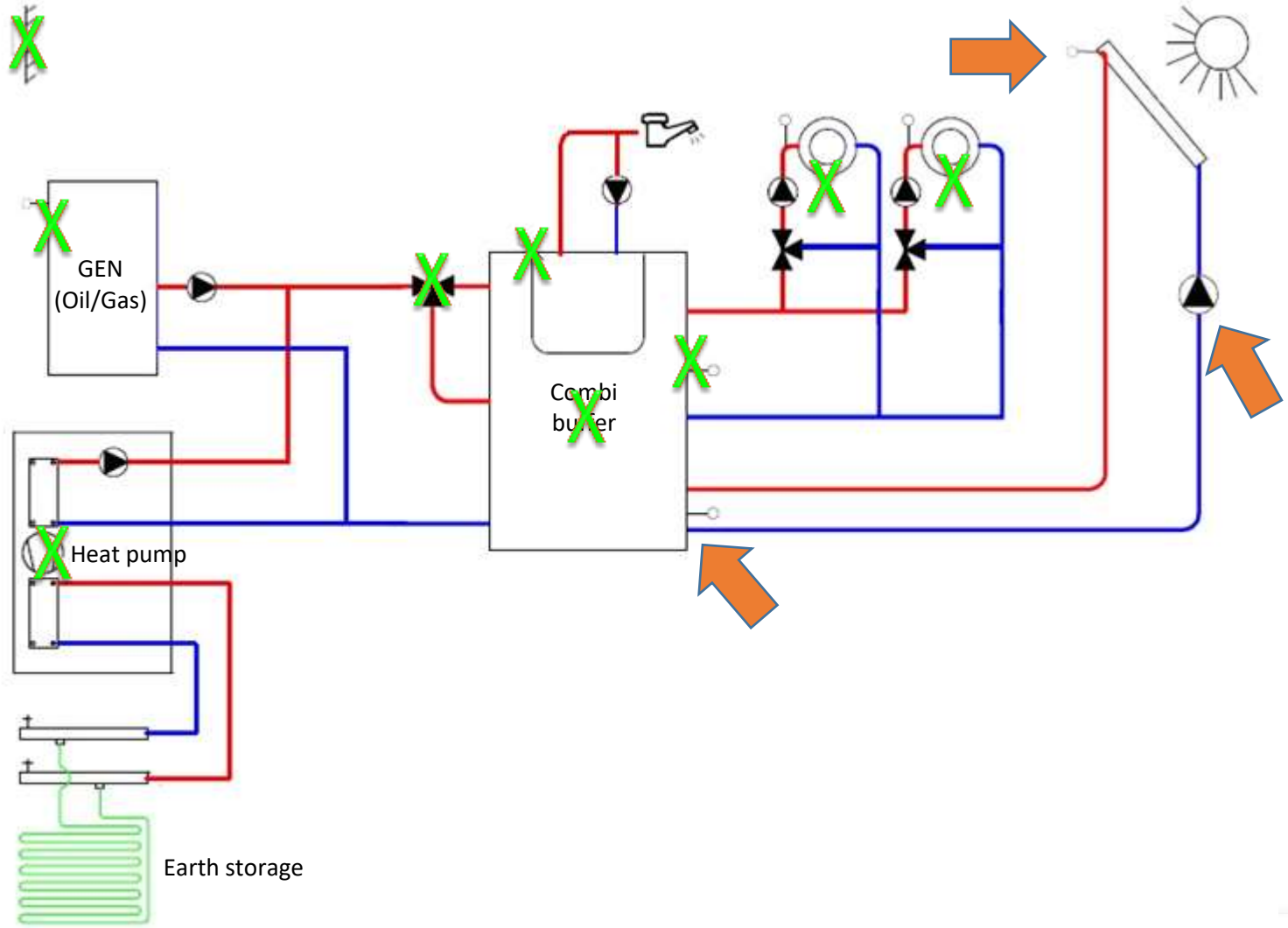

heatcon! EC hybrid system, 2x MC, combi buffer, solar

Setup wizard
DONE

With configuration
of the circulation pump,
the boiler pump
and of the
PWM signal of the SOP
continue

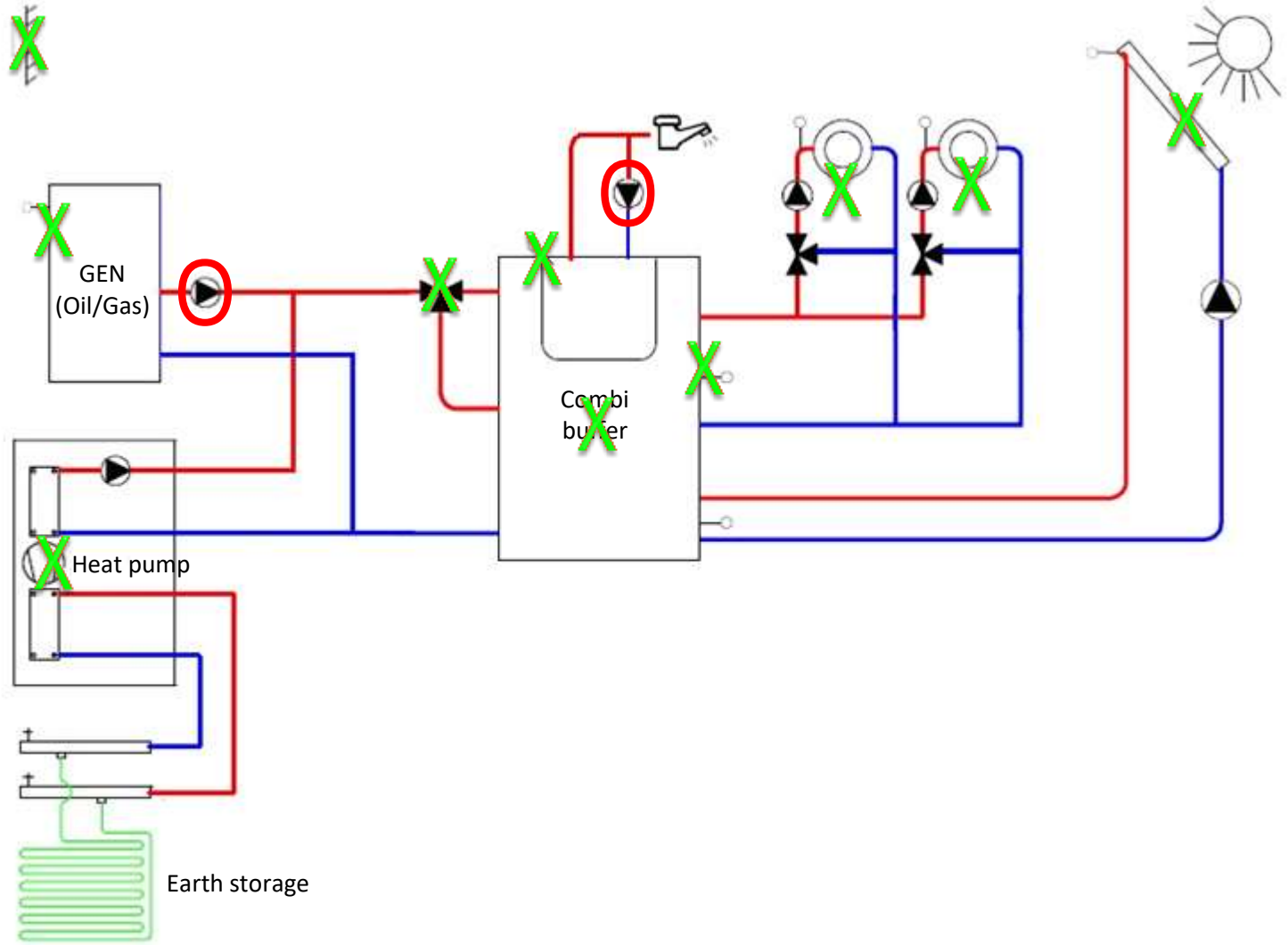

heatcon! EC hybrid system, 2x MC, combi buffer, solar

Config menu
Function
Hot water
Circulation pump
A4:ARS

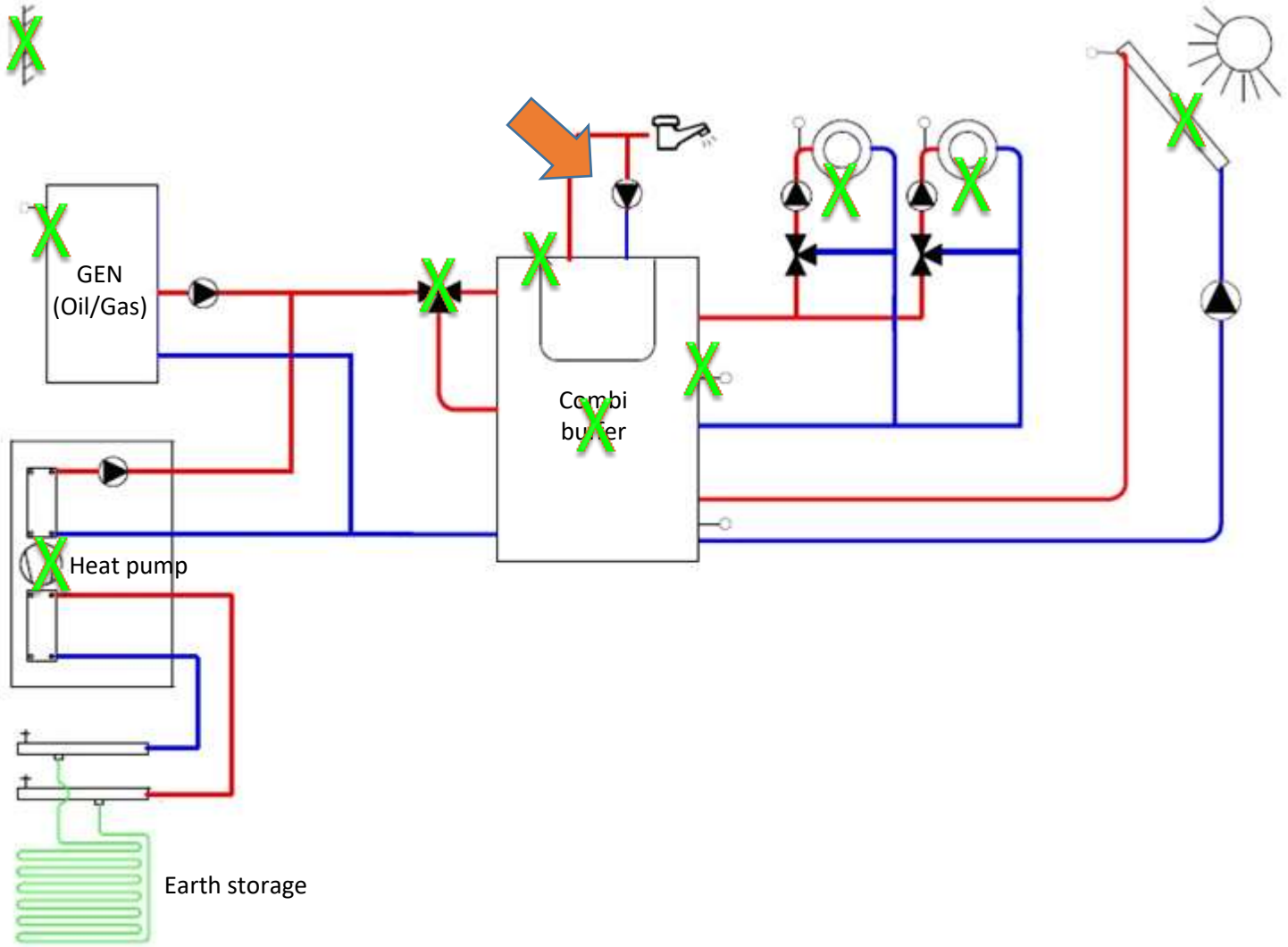

heatcon! EC hybrid system, 2x MC, combi buffer, solar

Config menu
Function
Energy generator 1
Pump relay (boiler pump)
A3:ARSP

The boiler pump will in this case on the last free Output laid. The connection is potential-free. At connection A3-1 is on-site put on the phase during from A3-2 the control of the boiler pump takes place.

ATTENTION!
Not with WG 1000.

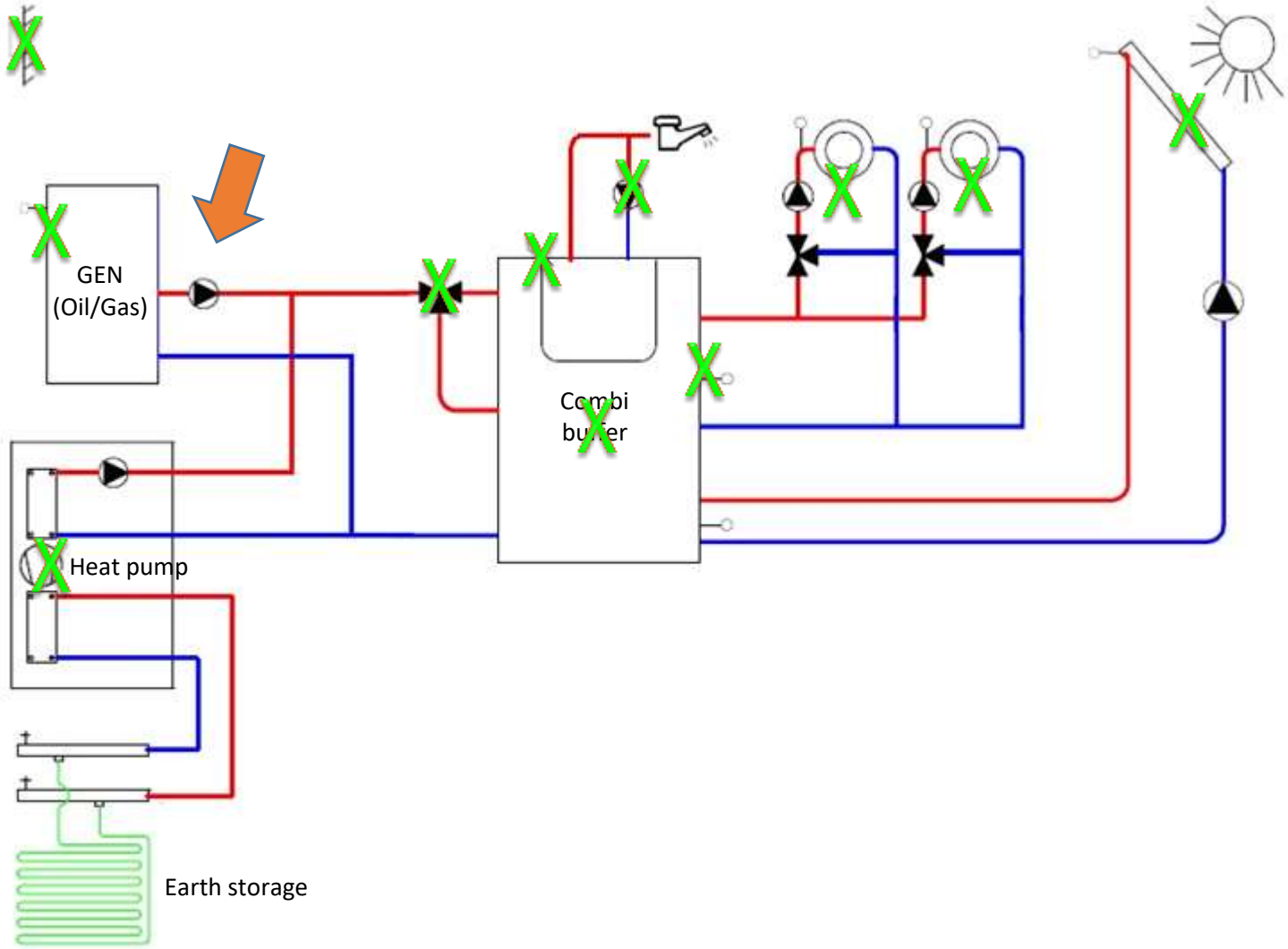

heatcon! EC hybrid system, 2x MC, combi buffer, solar

Config menu
Function
Difference 1
Pump 10V
A14:10V

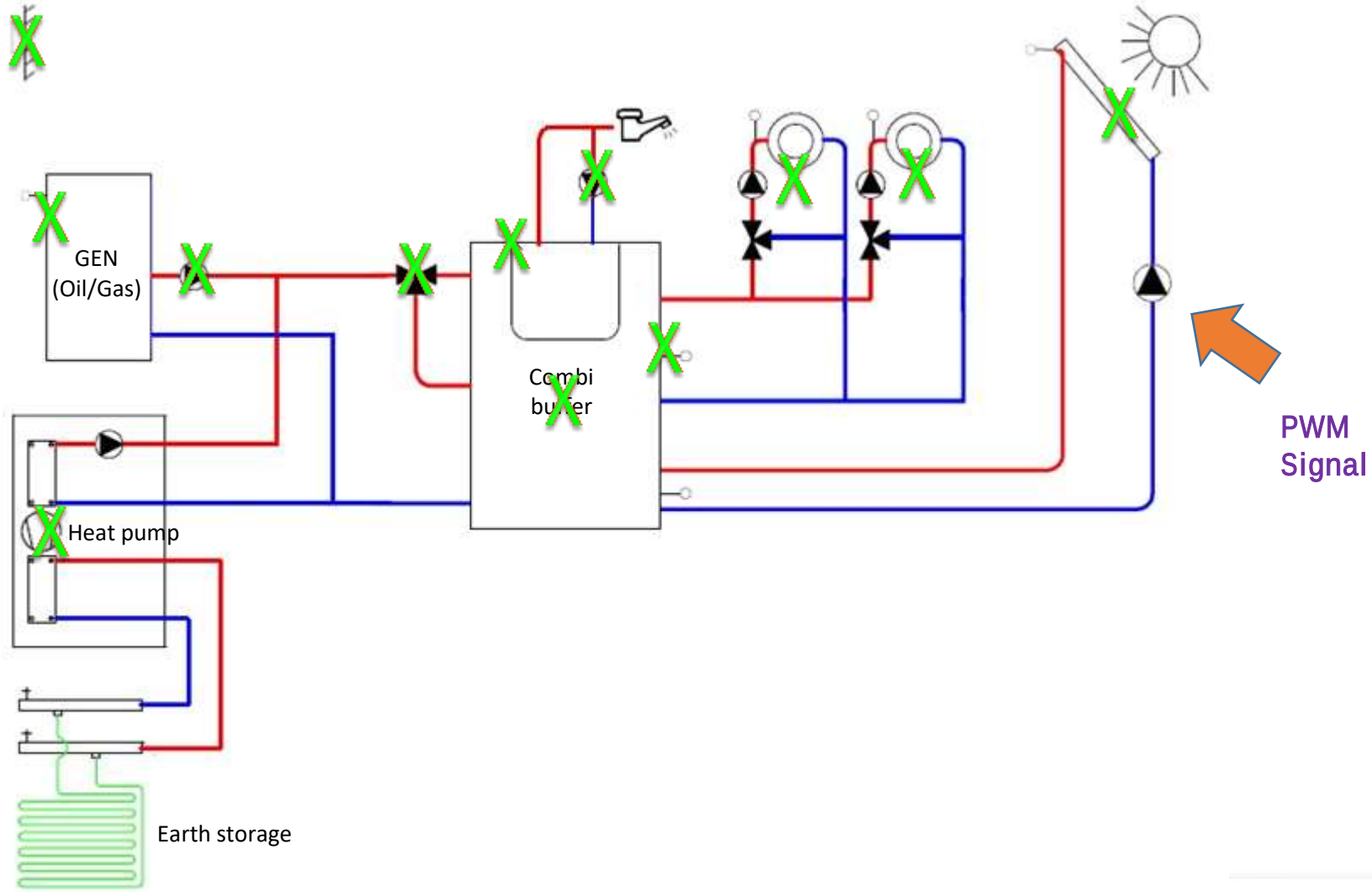

heatcon! EC hybrid system, 2x MC, combi buffer, solar

Config menu
Ready

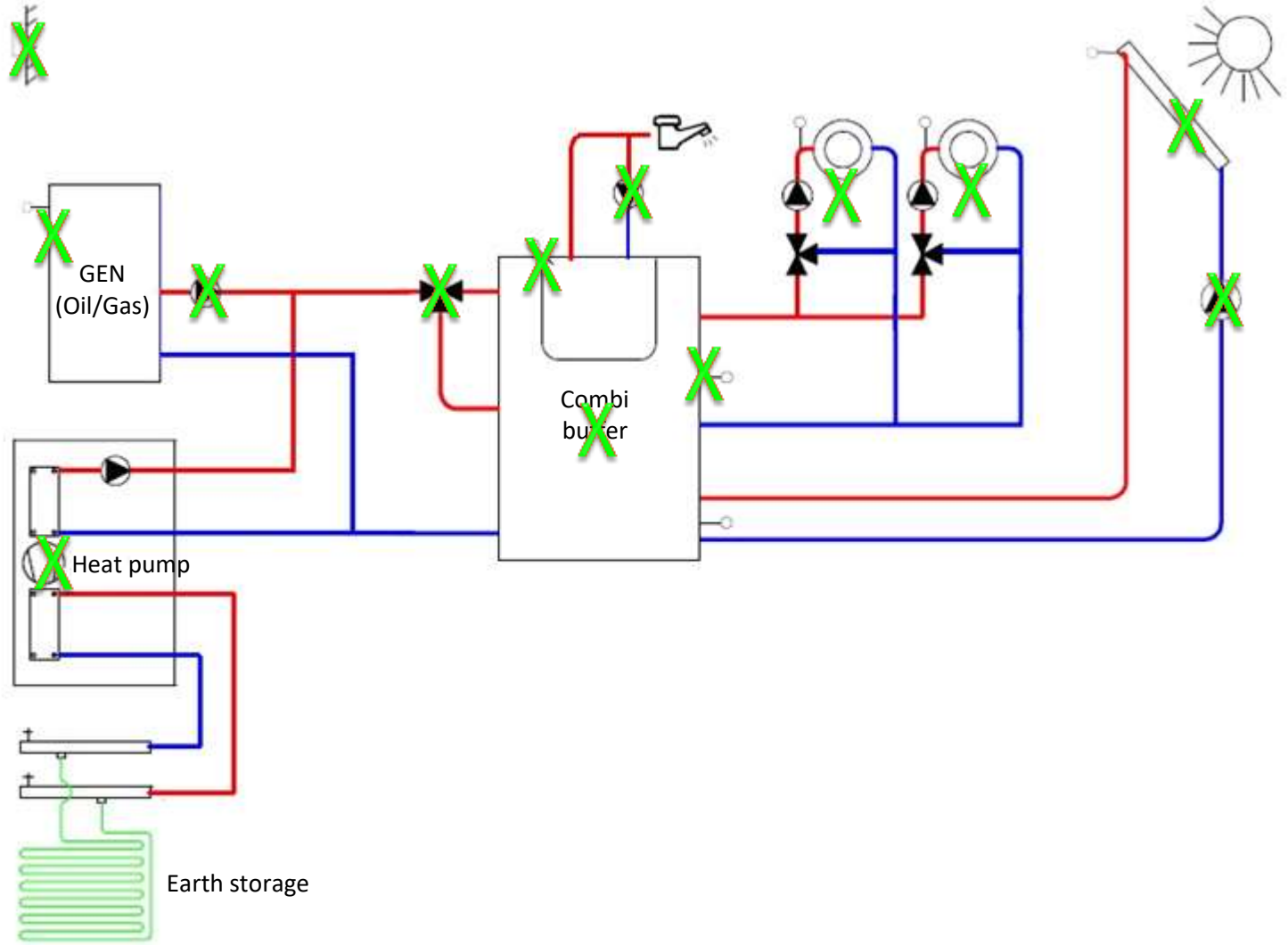

heatcon! Installation

If the electrical connection of the inputs and outputs was not made in advance, this can now be done. The connection assignment can be in the menu Configuration - Information - Pin assignment be viewed and noted.

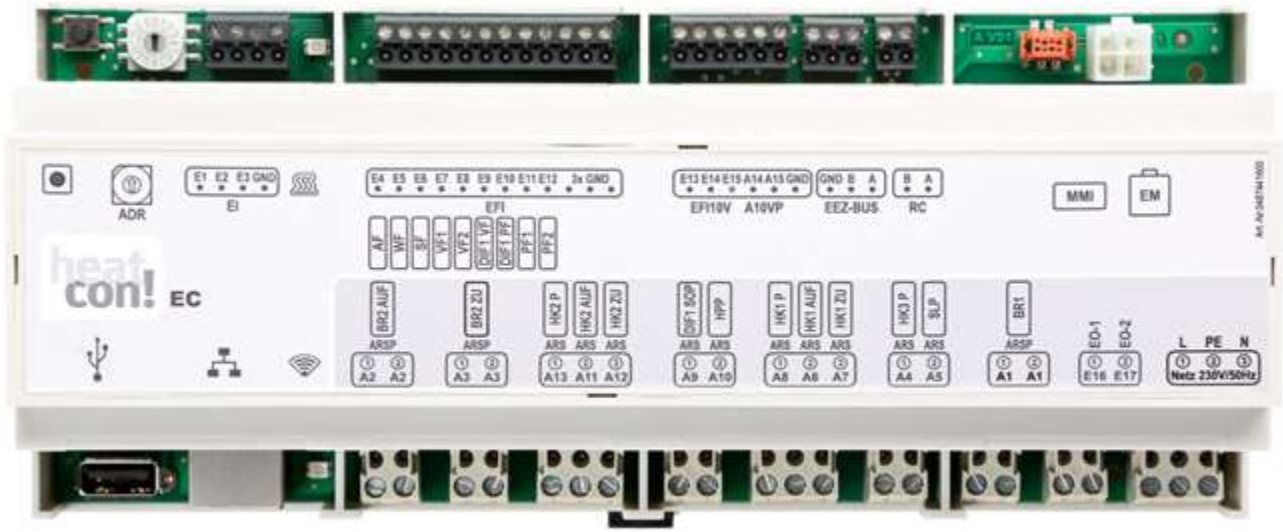

heatcon! EC hybrid system, 2x MC, combi buffer, solar

More features
(Regulatory)
are available in the
individual menus:
e.g.:
Solar operating mode
Summer/winter lock

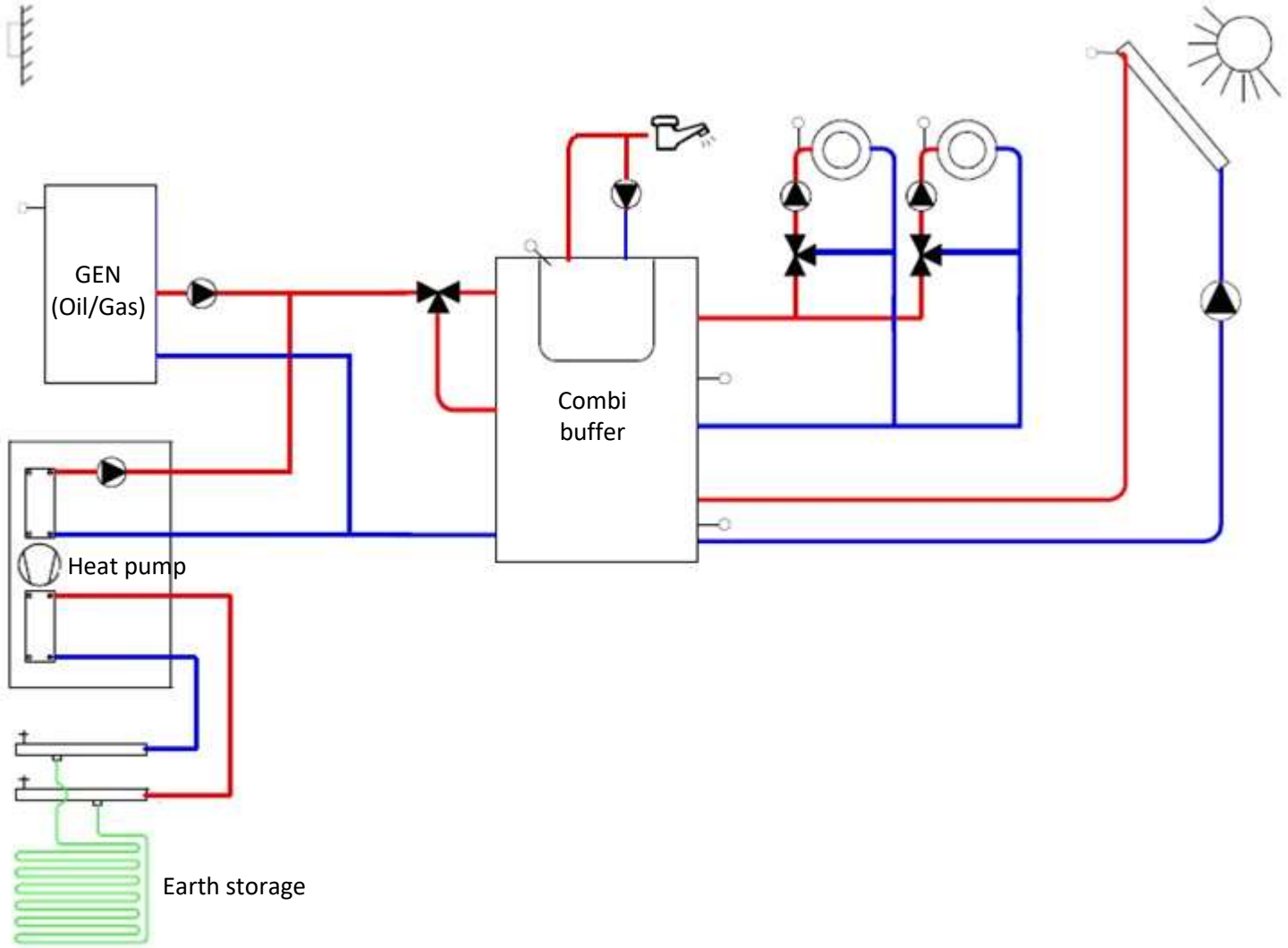

heatcon! EC hybrid system, 2x MC, combi buffer, solar

Solar menu
Basic setting
Operating mode
Hot water priority

Through this operating mode
one is prevented first,
that a parallel operation
of the hot water tank
of solar and GEN takes place.
A release of the GEN takes place
only after an adjustable temperature
undershoot and adjustable cycle
(time) lock.

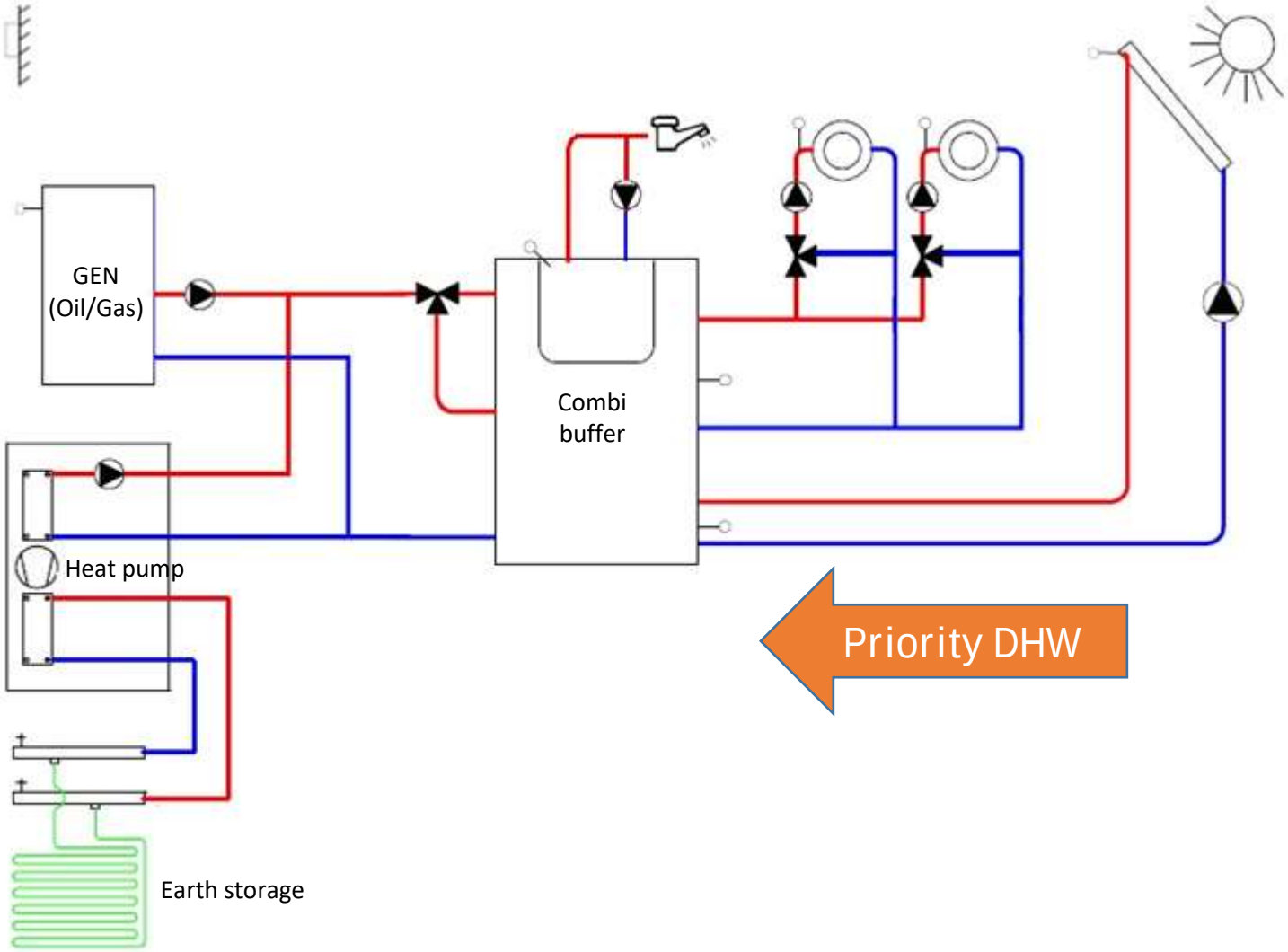

heatcon! EC hybrid system, 2x MC, combi buffer, solar

Summer lock
(GEN oil/gas)

Energy generator 1 menu
Basic setting
Summer lock
e.g. 2°C

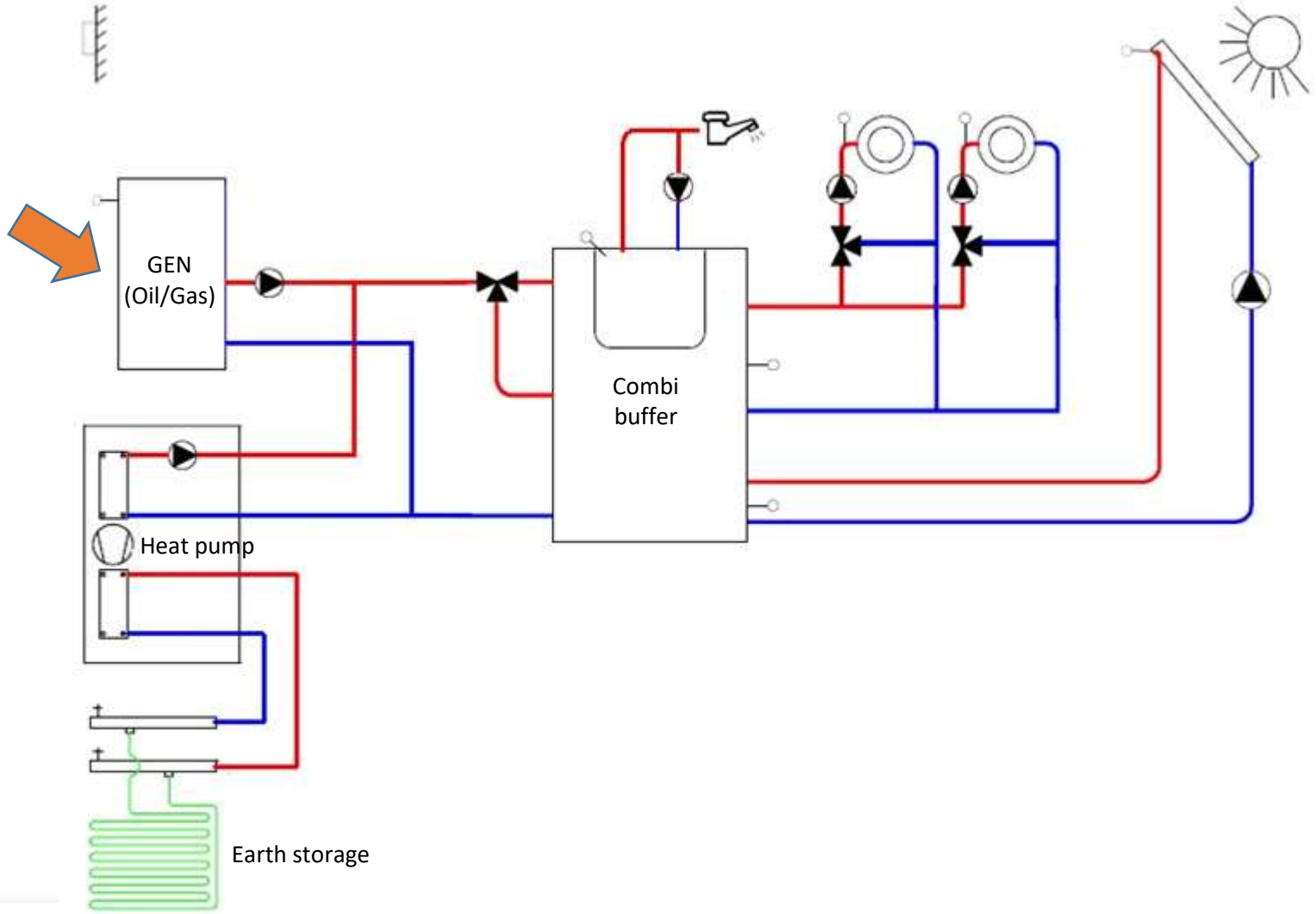

heatcon! EC hybrid system, 2x MC, combi buffer, solar

Winter lock
(Heat pump)

Energy generator 2 menu
Basic setting
Winter lock
e.g. 0°C

Notice!

For a seamless switching, the Winter lock 2K lower be set as the Summer lock.

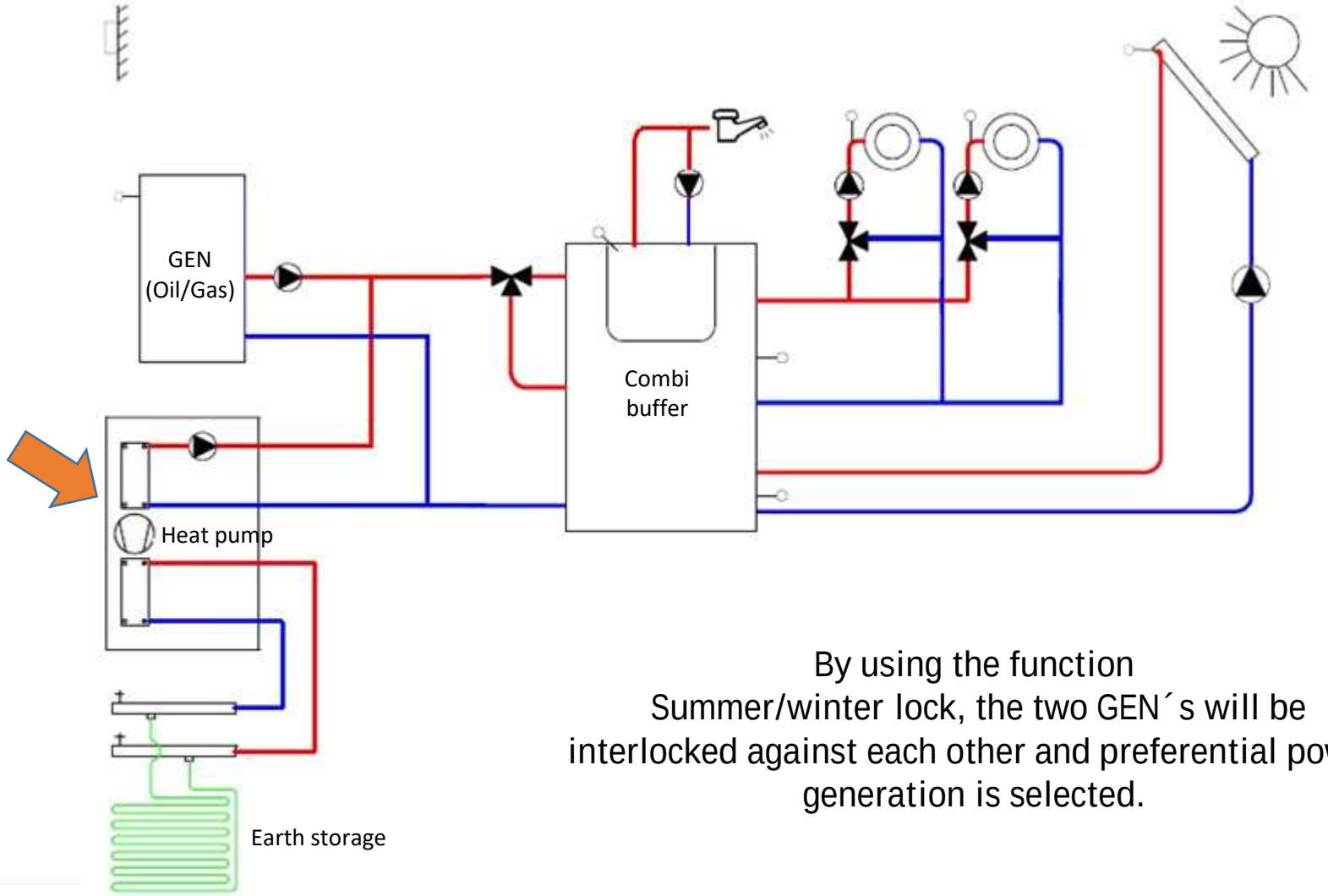

By using the function Summer/winter lock, the two GEN´s will be interlocked against each other and preferential power generation is selected.

heatcon! EC hybrid system, 2x MC, combi buffer, solar

Ready

Now further
Plant-specific
or customised
Settings in the individual
menus can be made:
e.g.:
Min. / Max. limits
Switching times
Room setpoint temperatures
etc.

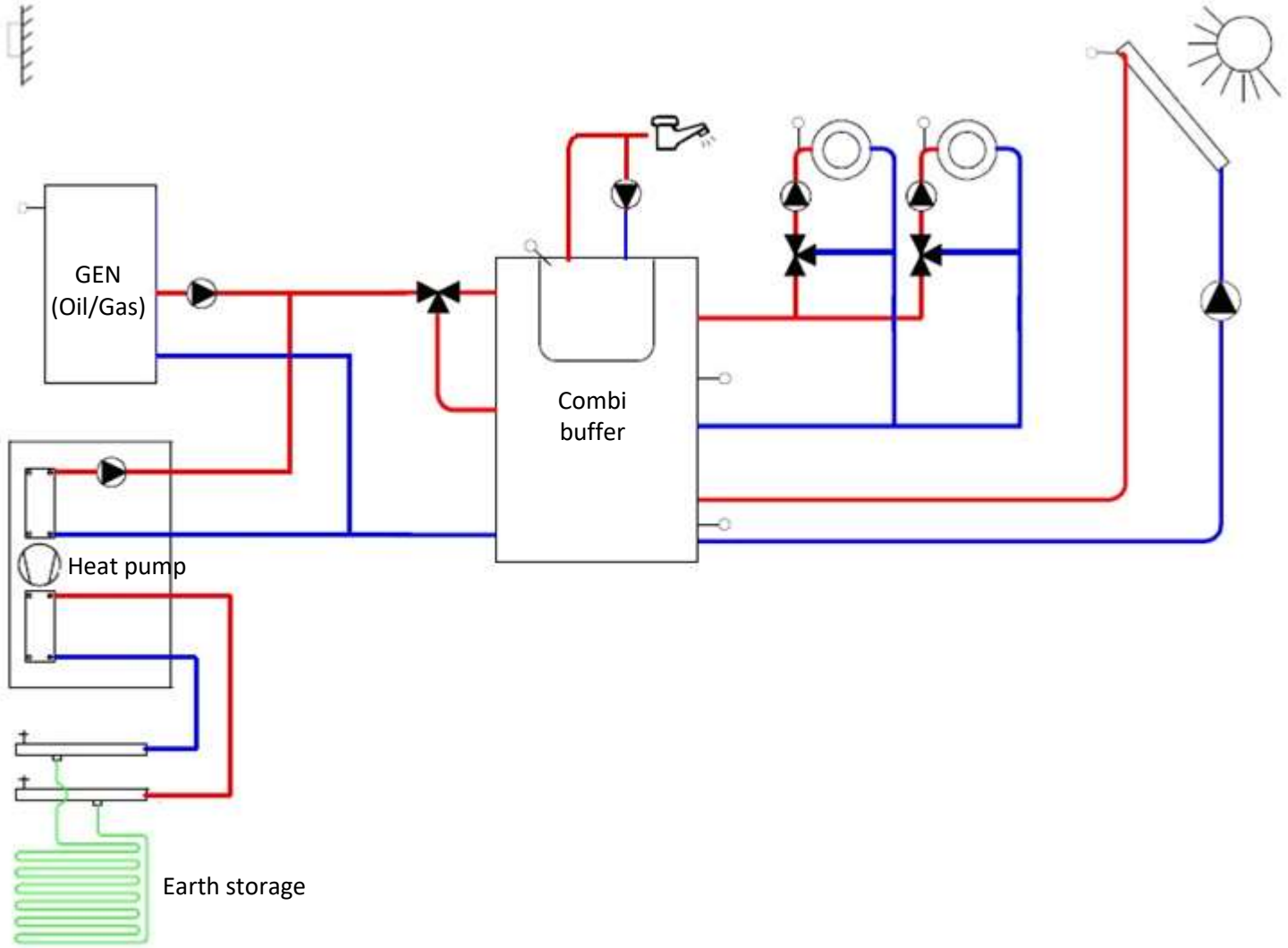

EbV elektronik

EbV elektronik

heatcon!

heatcon! EC